STOBAG VENTOSOL VS5100 / 2

Vertical awning with zipper technology, reveal mounting

STONE FACADE DETAIL CUT

SCALE	1:10
PRODUCT	VENTOSOL
CREATED	March 2015/FS

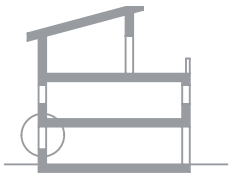

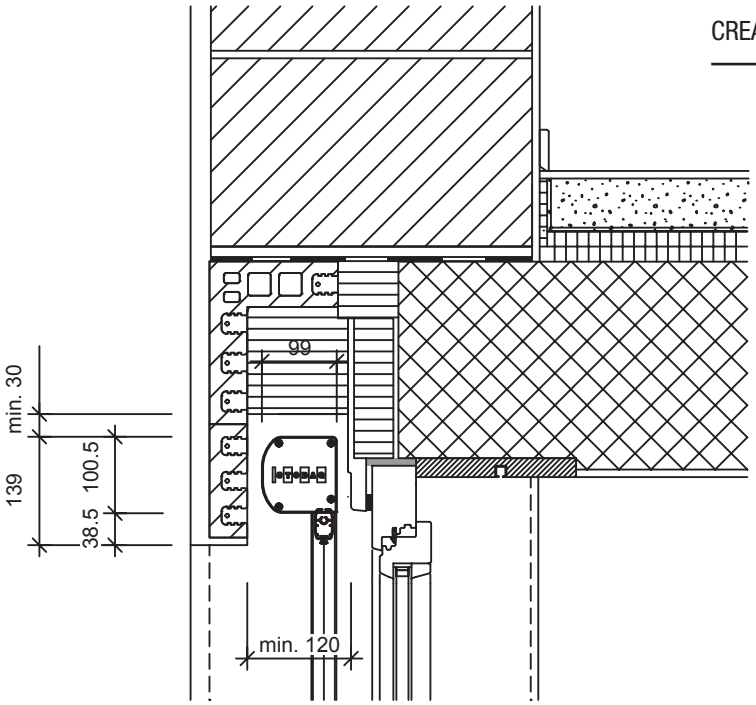

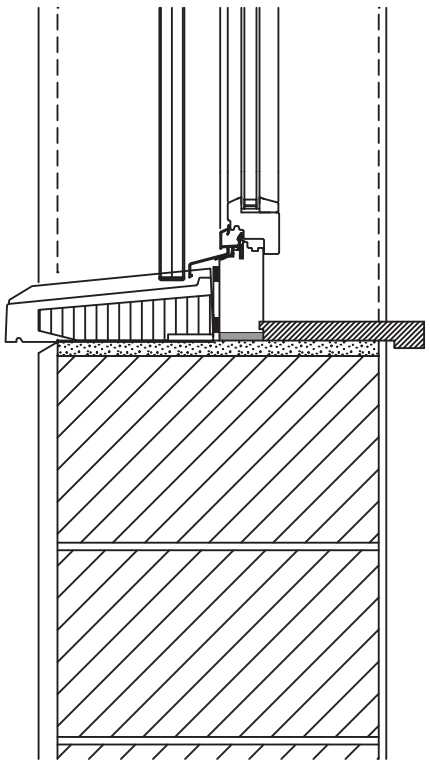

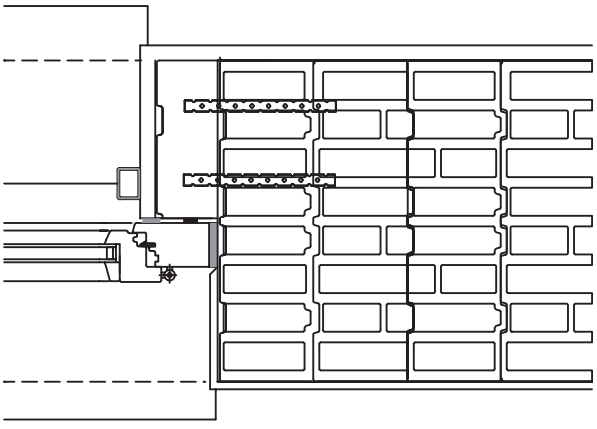

STOBAG VENTOSOL VS5100 / 2

Vertical awning with zipper technology, reveal mounting

STONE FACADE DETAIL CUT

SCALE	1:10
PRODUCT	VENTOSOL
CREATED	March 2015/FS

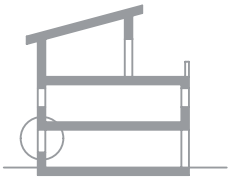

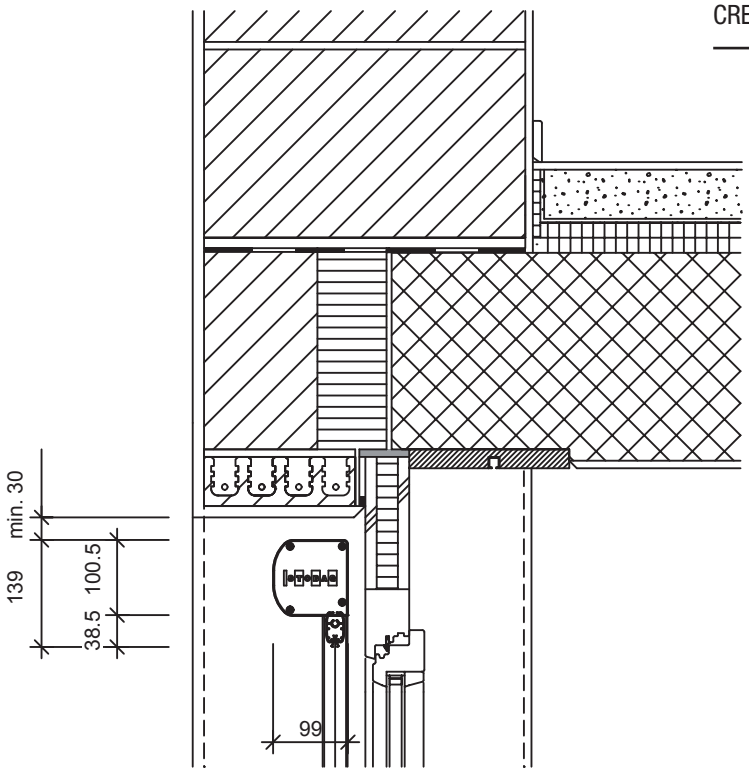

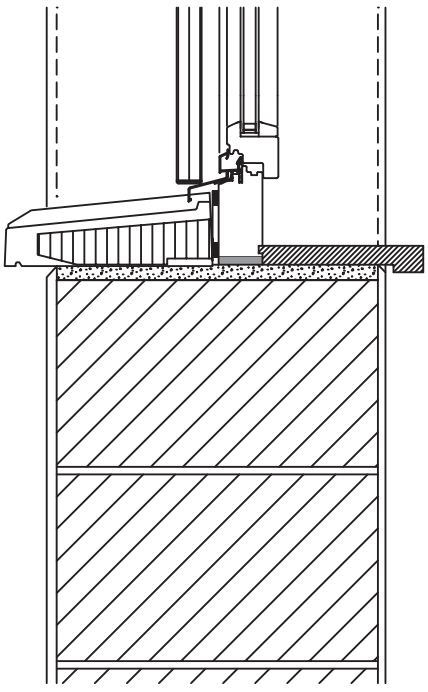

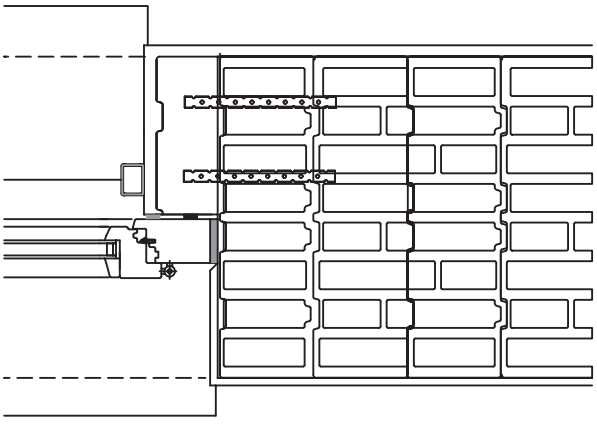

STOBAG VENTOSOL VS5100 / 2

Vertical awning with zipper technology, reveal mounting

WOOD FACADE DETAIL CUT

SCALE	1:10
PRODUCT	VENTOSOL
CREATED	March 2015/FS

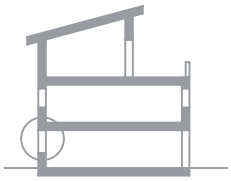

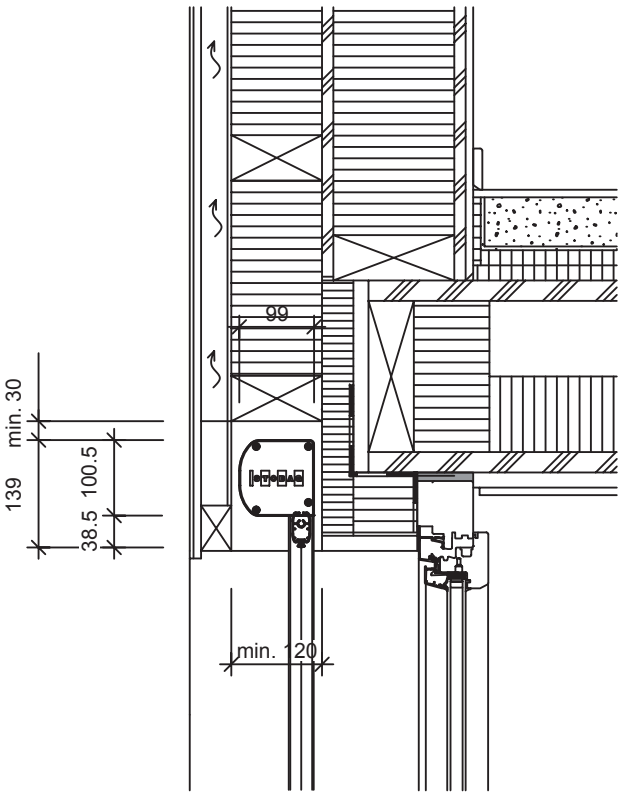

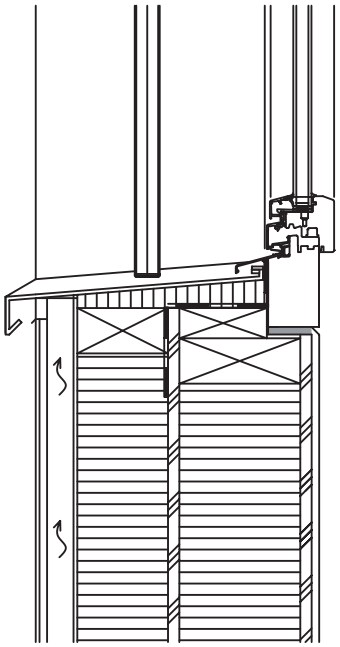

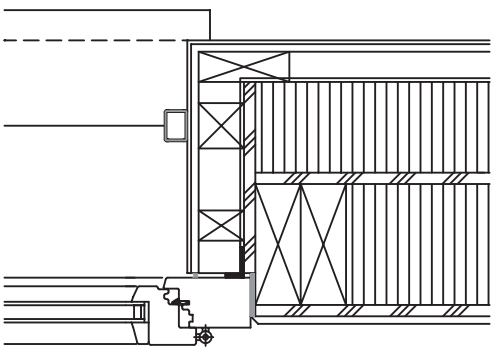

STOBAG VENTOSOL VS5100 / 2

Vertical awning with zipper technology, reveal mounting

WOOD FACADE DETAIL CUT

SCALE	1:10
PRODUCT	VENTOSOL
CREATED	March 2015/FS

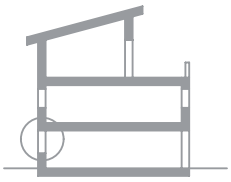

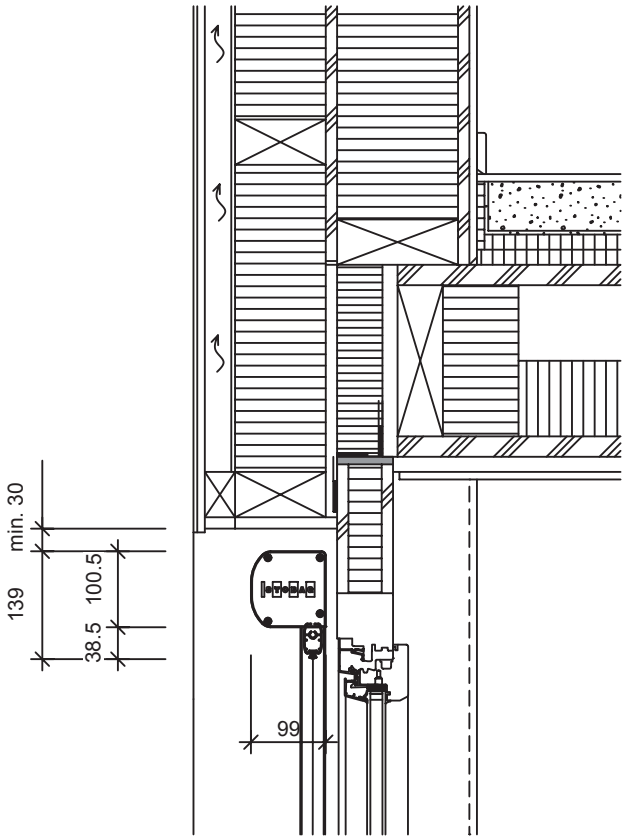

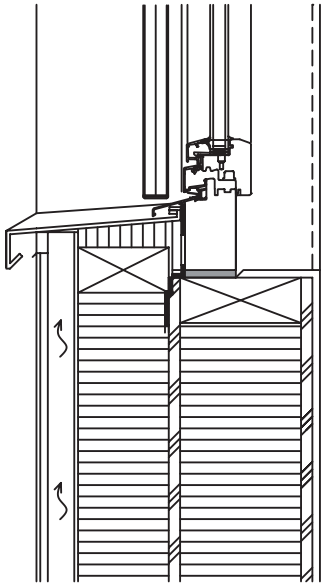

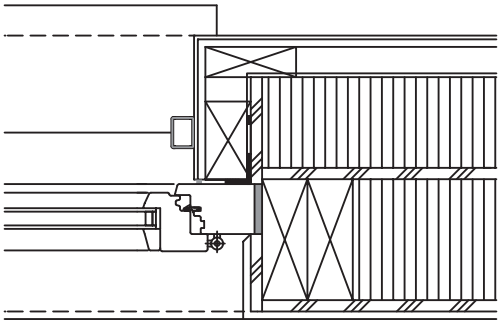

STOBAG VENTOSOL VS5100 / 2

Vertical awning with zipper technology, reveal mounting

COMPACT FACADE DETAIL CUT

SCALE	1:10
PRODUCT	VENTOSOL
CREATED	March 2015/FS

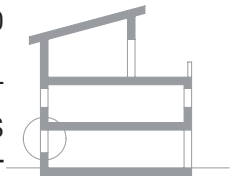

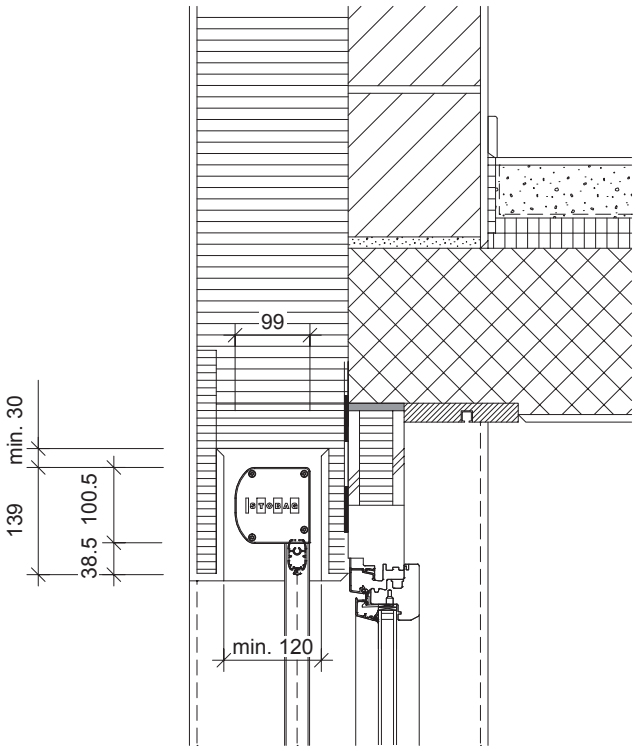

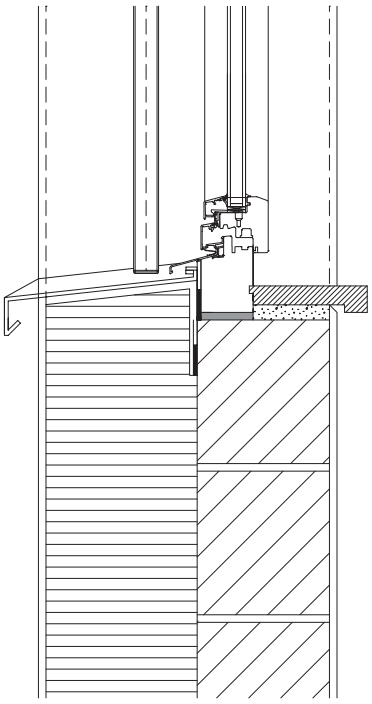

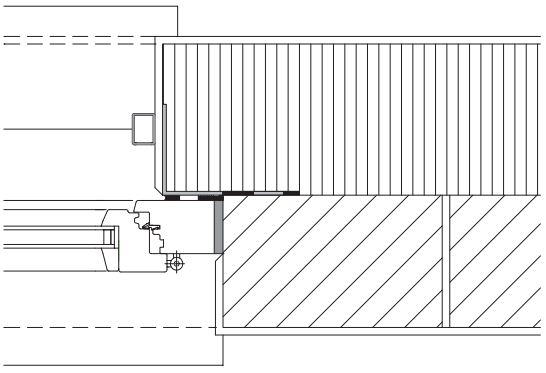

STOBAG VENTOSOL VS5100 / 2

Vertical awning with zipper technology, reveal mounting

COMPACT FACADE DETAIL CUT

SCALE	1:10
PRODUCT	VENTOSOL
CREATED	March 2015/FS

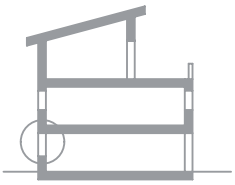

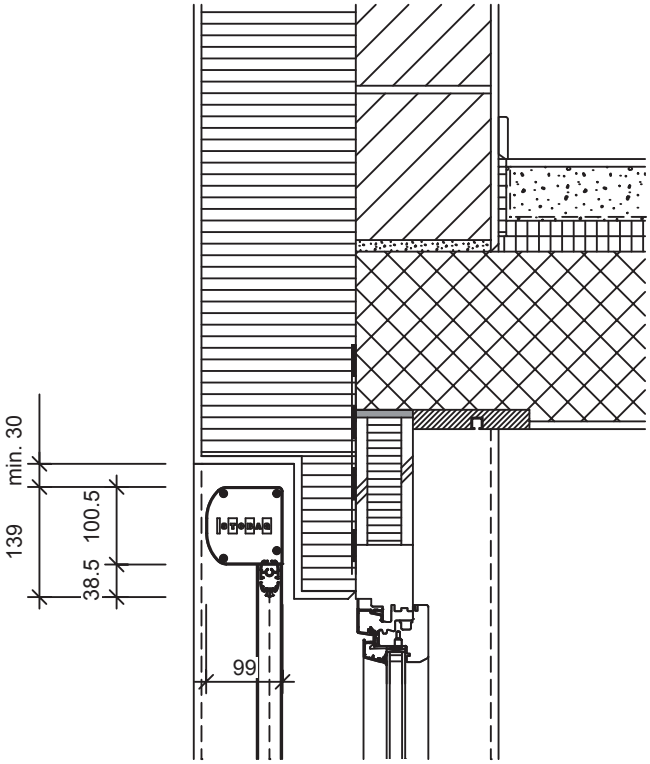

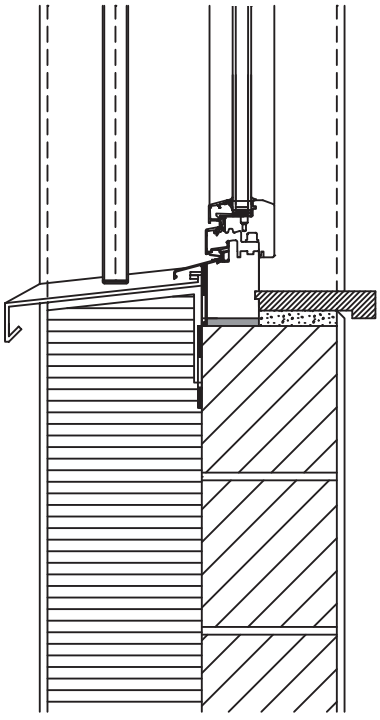

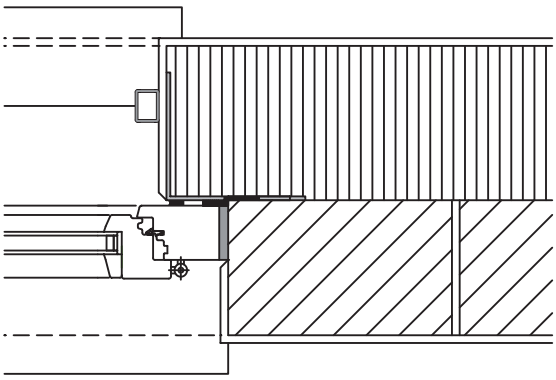

STOBAG VENTOSOL VS5100 / 2

Vertical awning with zipper technology, reveal mounting

EXPOSED BRICK MASONRY DETAIL SECTION

SCALE	1:10
PRODUCT	VENTOSOL
CREATED	March 2015/FS

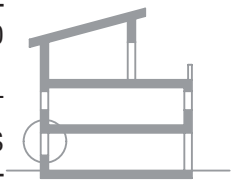

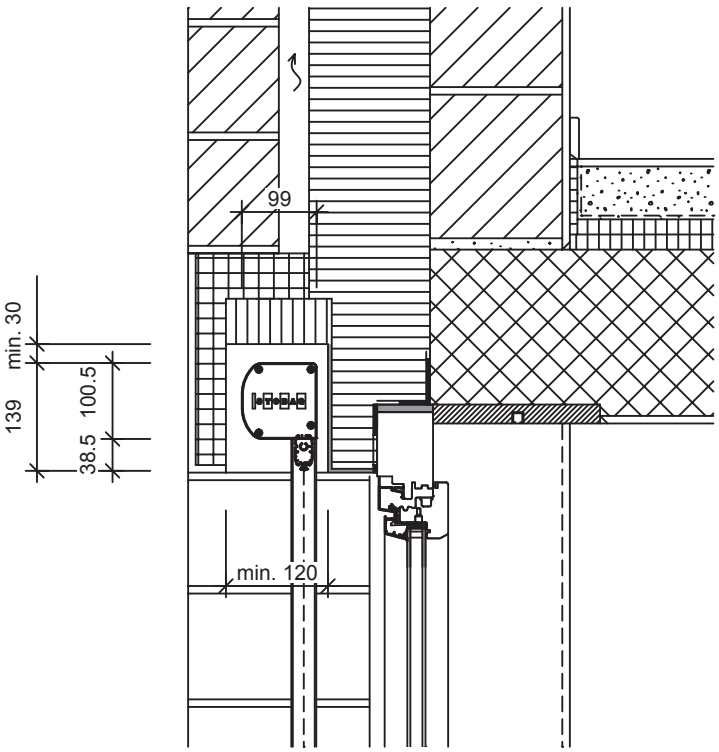

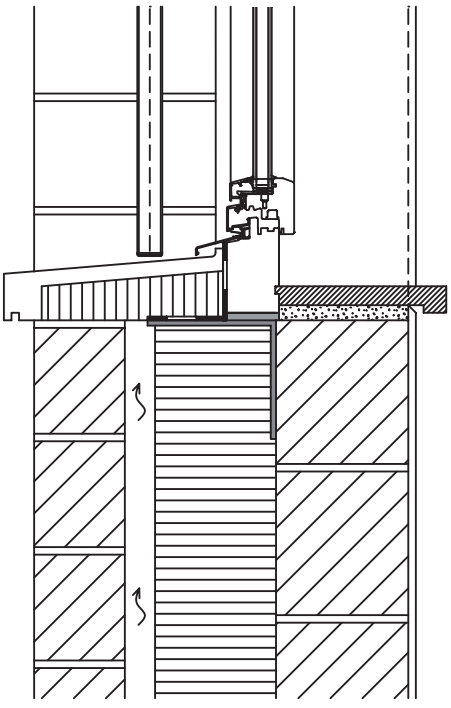

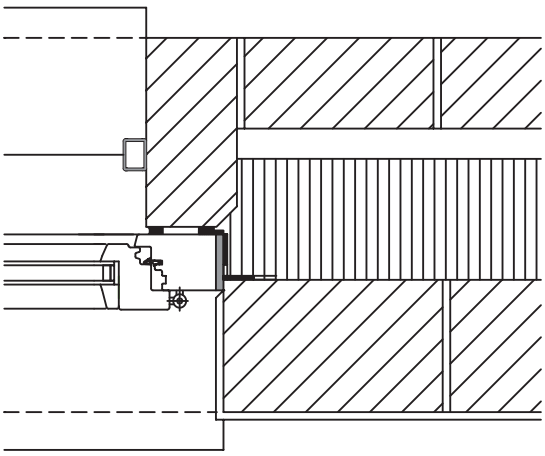

STOBAG VENTOSOL VS5100 / 2

Vertical awning with zipper technology, reveal mounting

EXPOSED BRICK MASONRY DETAIL SECTION

SCALE	1:10
PRODUCT	VENTOSOL
CREATED	March 2015/FS

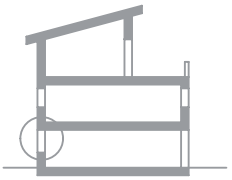

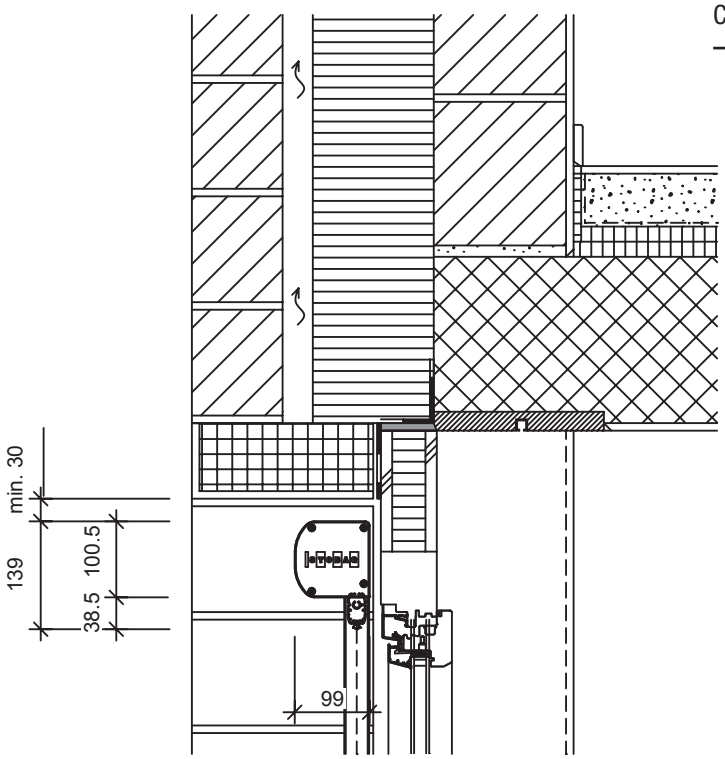

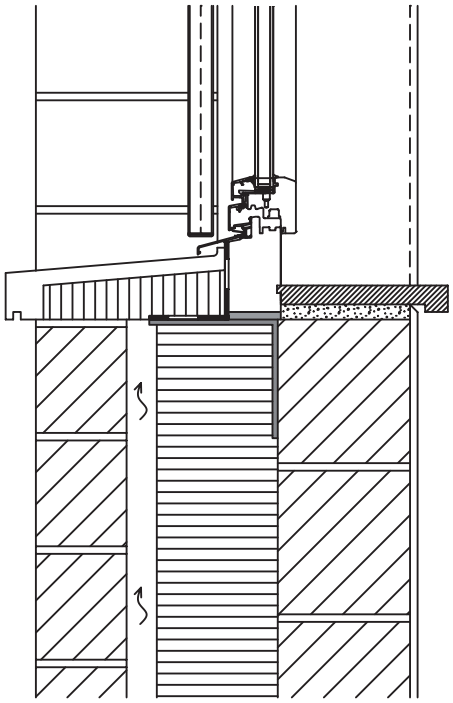

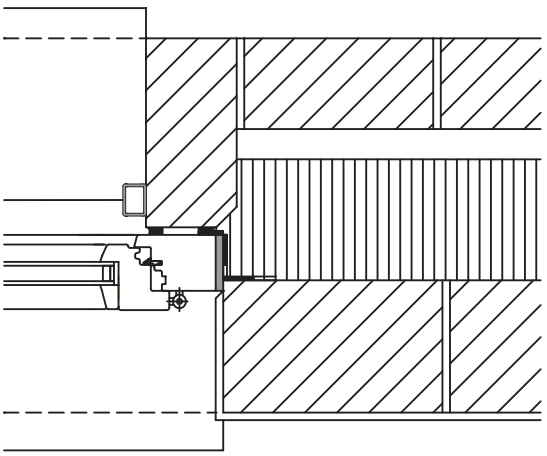

STOBAG VENTOSOL VS5100 / 2

Vertical awning with zipper technology, reveal mounting

EXPOSED CONCRETE FACADE DETAIL CUT

SCALE	1:10
PRODUCT	VENTOSOL
CREATED	March 2015/FS

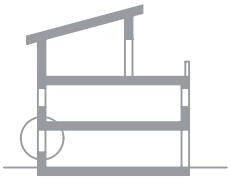

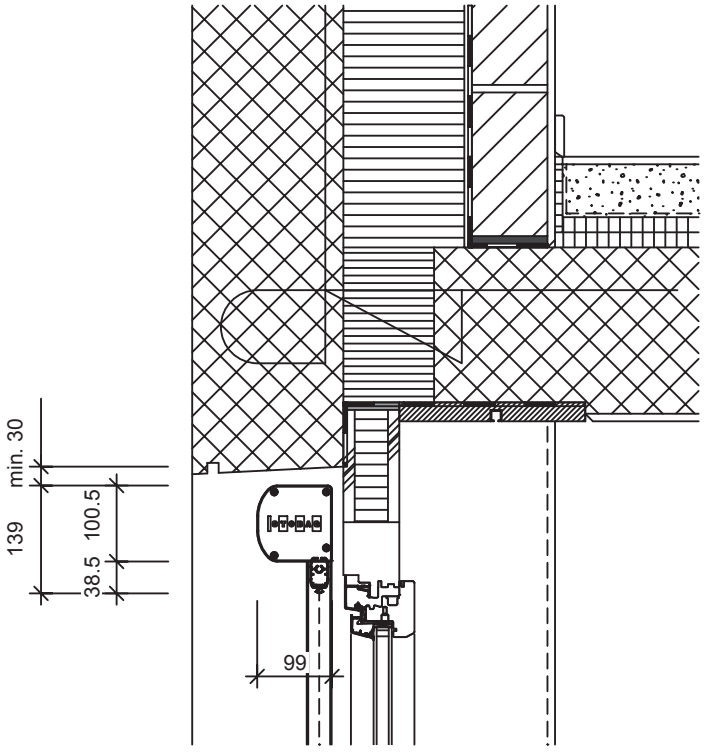

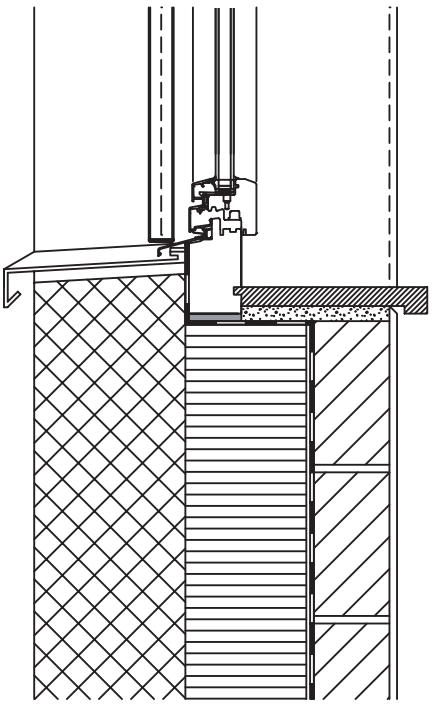

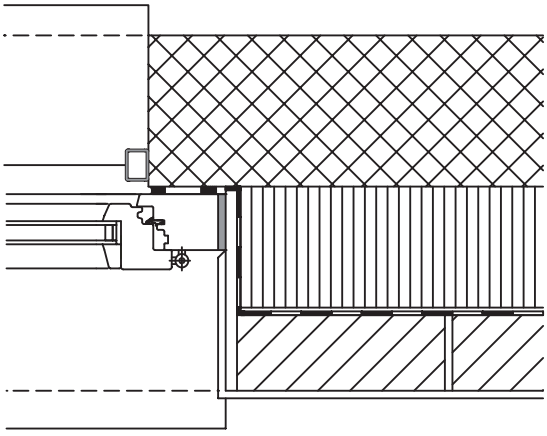

STOBAG VENTOSOL VS5200 / 2

Vertical awning with zipper technology, reveal mounting

STONE FACADE DETAIL CUT

SCALE	1:10
PRODUCT	VENTOSOL
CREATED	March 2015/FS

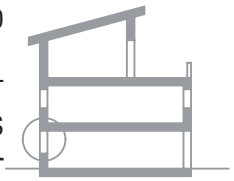

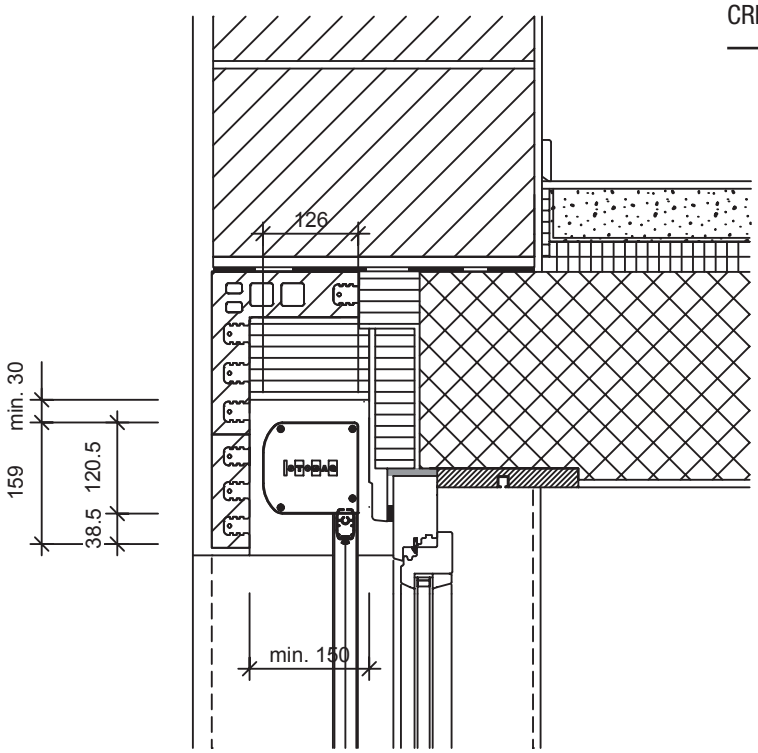

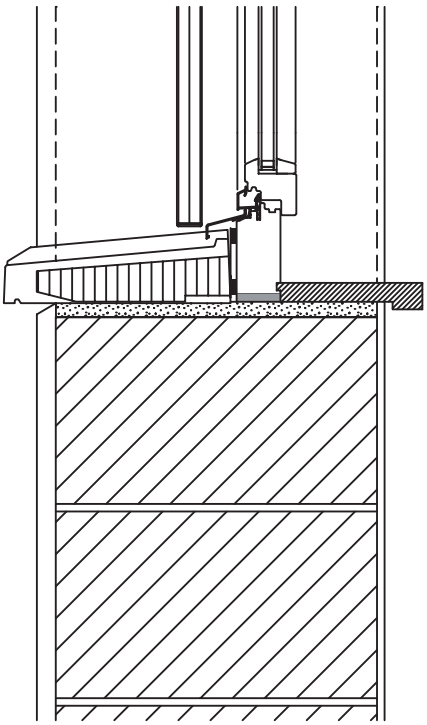

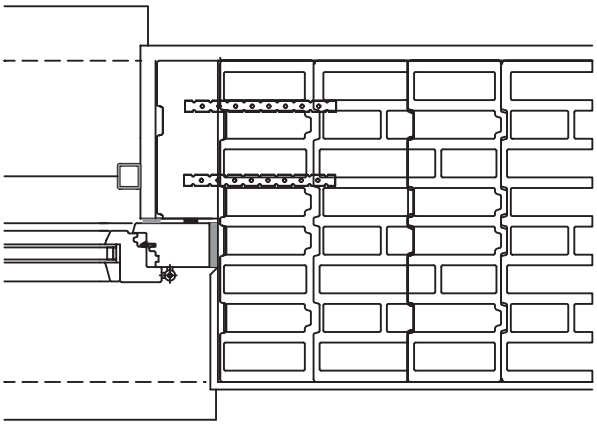

STOBAG VENTOSOL VS5200 / 2

Vertical awning with zipper technology, reveal mounting

STONE FACADE DETAIL CUT

SCALE	1:10
PRODUCT	VENTOSOL
CREATED	March 2015/FS

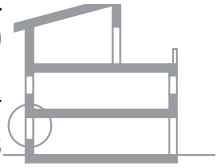

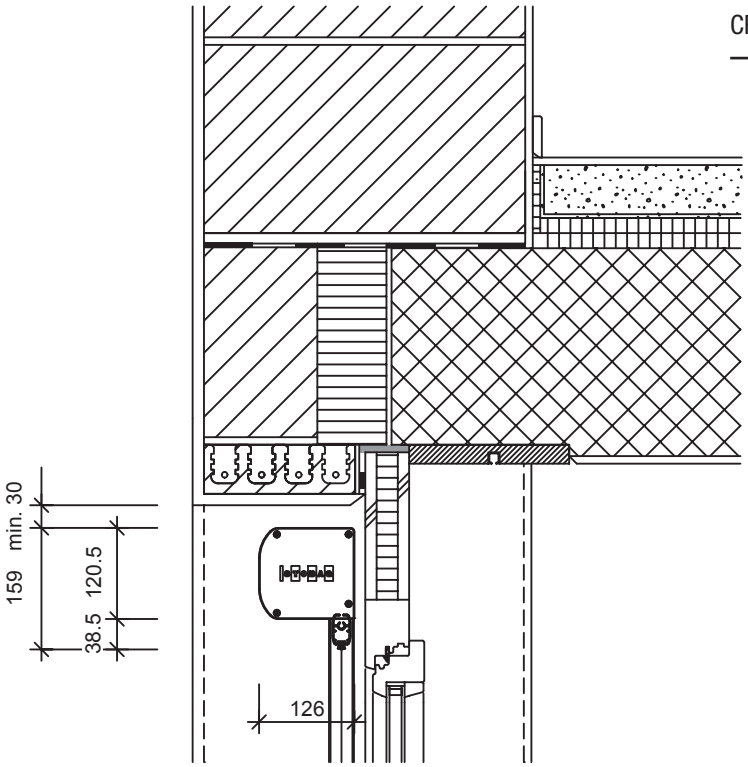

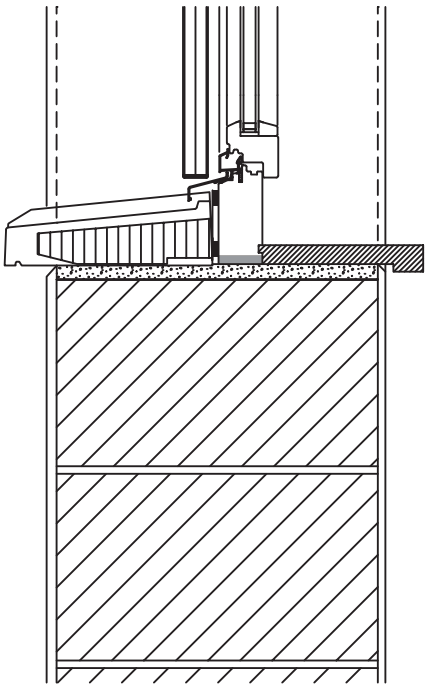

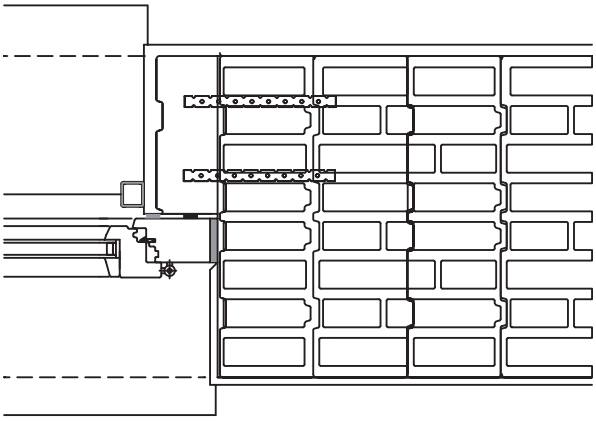

STOBAG VENTOSOL VS5200 / 2

Vertical awning with zipper technology, reveal mounting

WOOD FACADE DETAIL CUT

SCALE	1:10
PRODUCT	VENTOSOL
CREATED	March 2015/FS

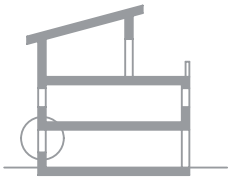

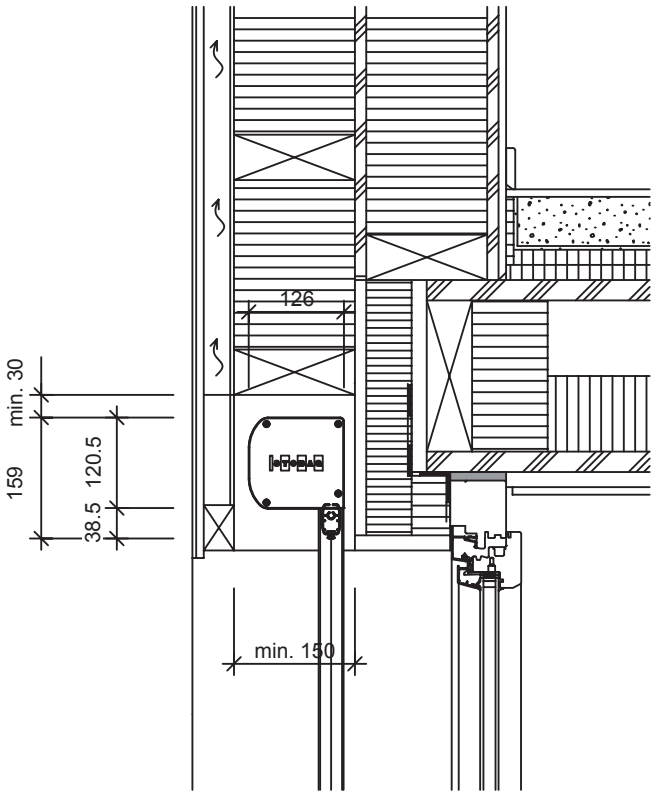

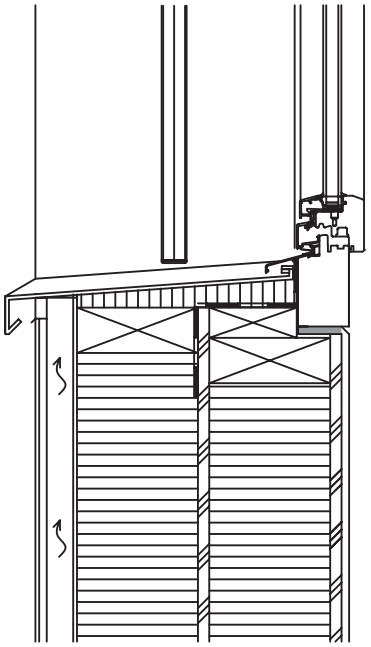

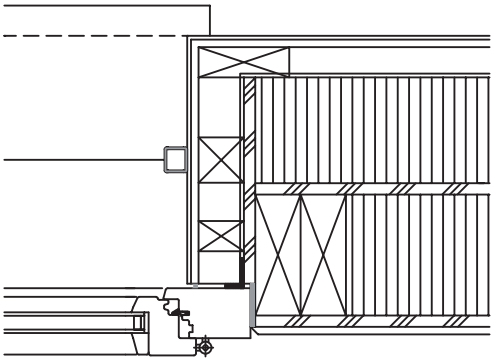

STOBAG VENTOSOL VS5200 / 2

Vertical awning with zipper technology, reveal mounting

WOOD FACADE DETAIL CUT

SCALE	1:10
PRODUCT	VENTOSOL
CREATED	March 2015/FS

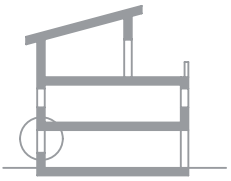

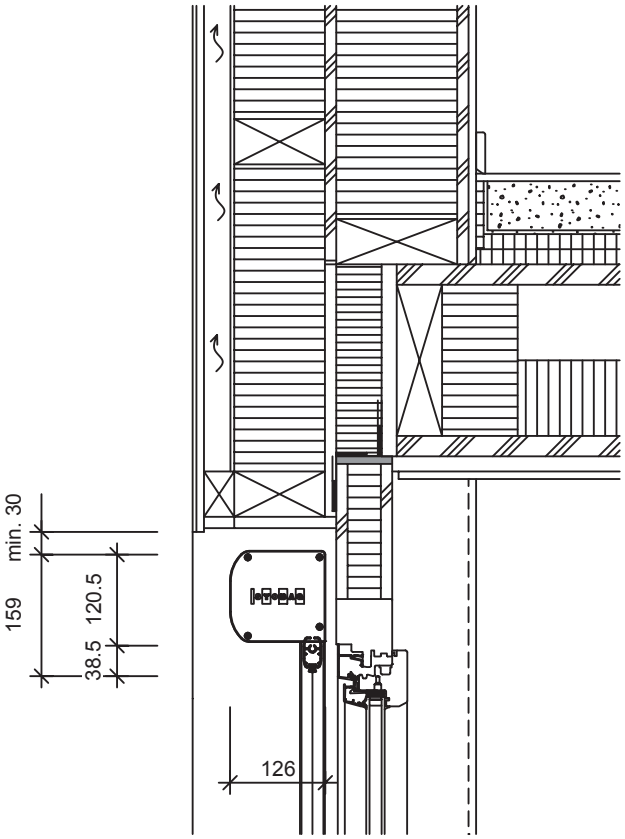

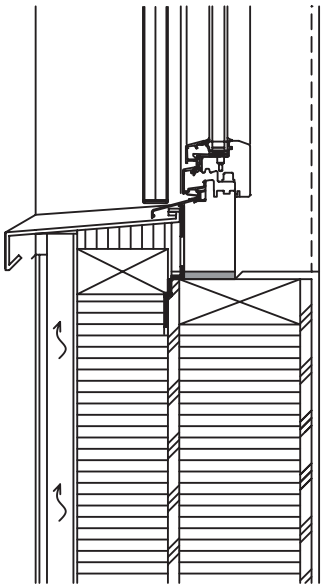

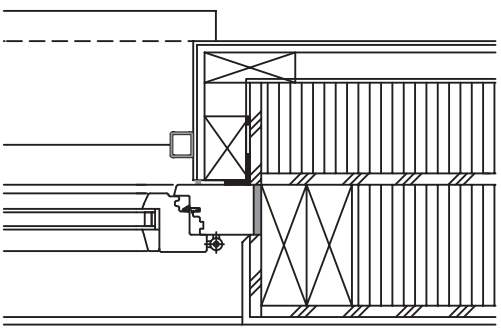

STOBAG VENTOSOL VS5200 / 2

Vertical awning with zipper technology, reveal mounting

COMPACT FACADE DETAIL CUT

SCALE	1:10
PRODUCT	VENTOSOL
CREATED	March 2015/FS

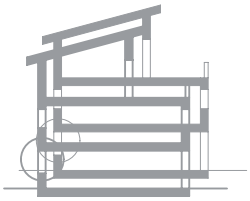

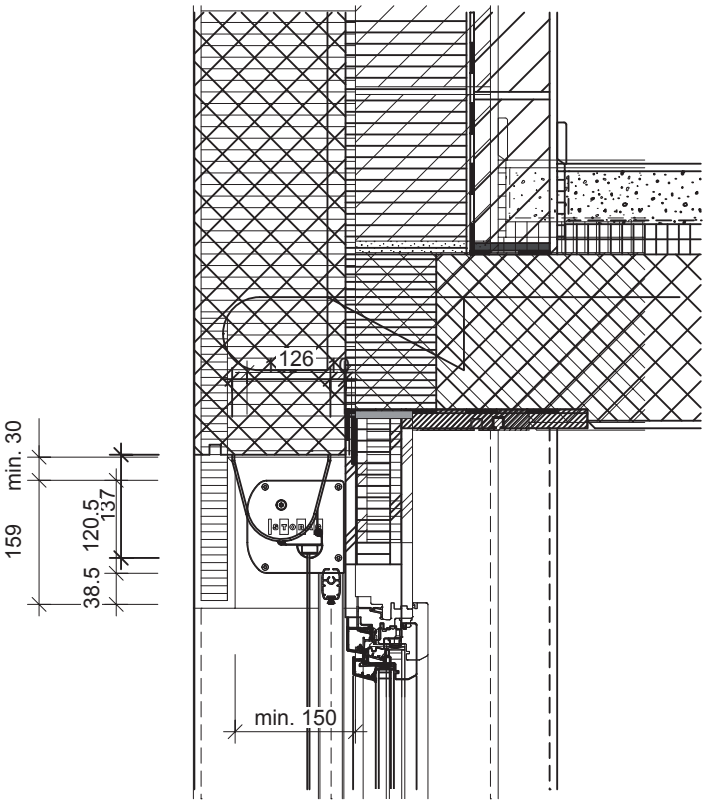

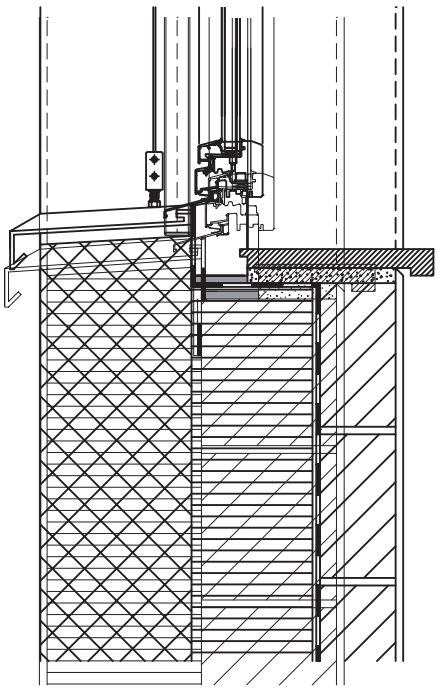

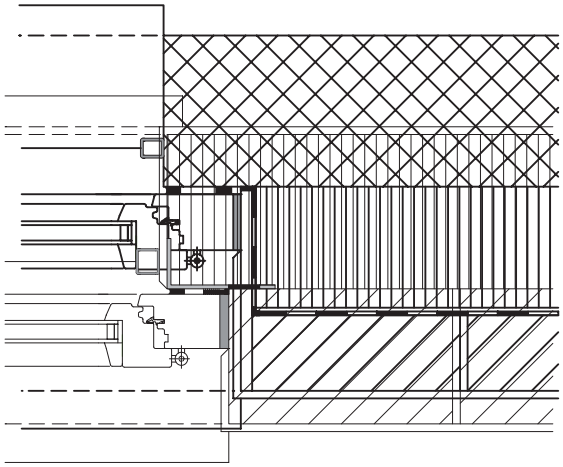

STOBAG VENTOSOL VS5200 / 2

Vertical awning with zipper technology, reveal mounting

COMPACT FACADE DETAIL CUT

SCALE	1:10
PRODUCT	VENTOSOL
CREATED	March 2015/FS

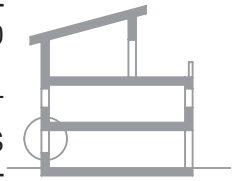

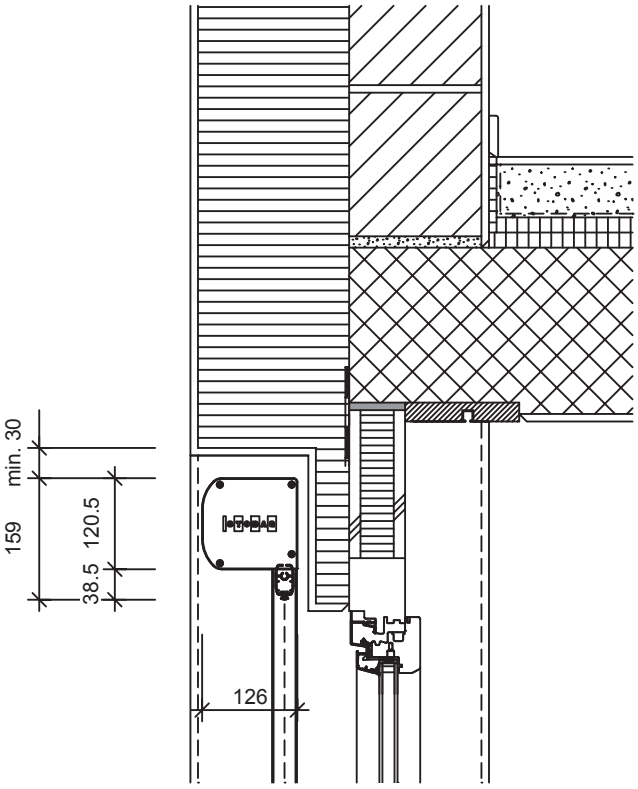

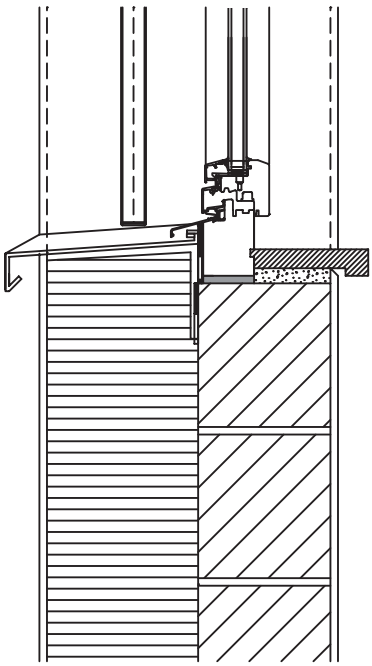

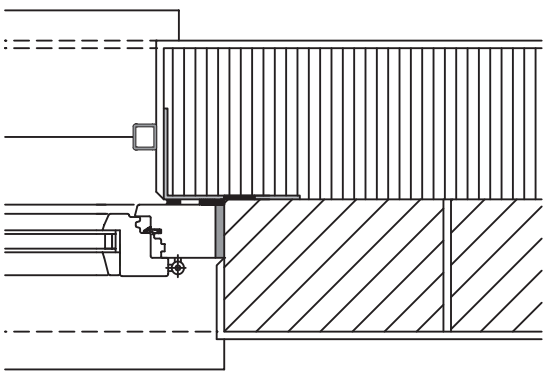

STOBAG VENTOSOL VS5200 / 2

Vertical awning with zipper technology, reveal mounting

EXPOSED BRICK MASONRY DETAIL SECTION

SCALE	1:10
PRODUCT	VENTOSOL
CREATED	March 2015/FS

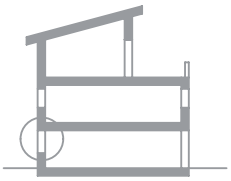

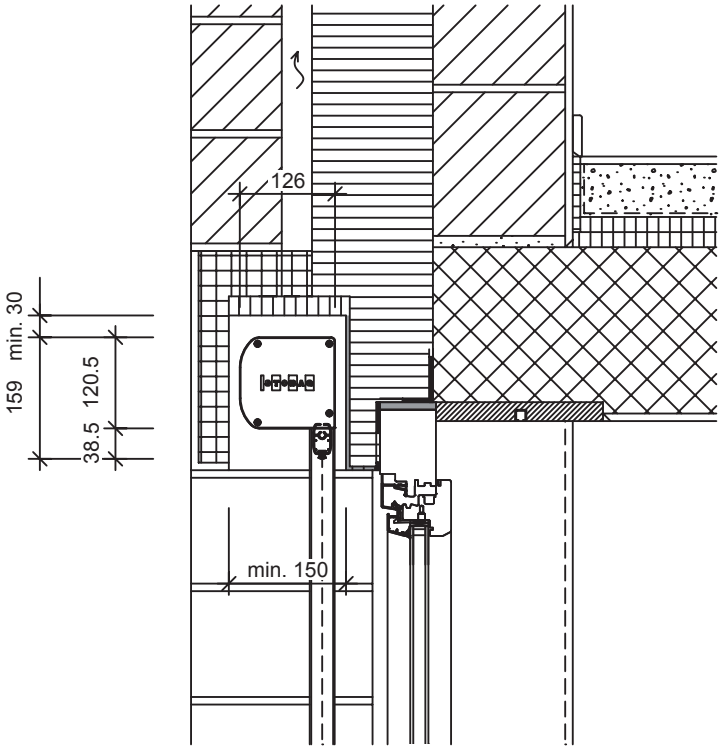

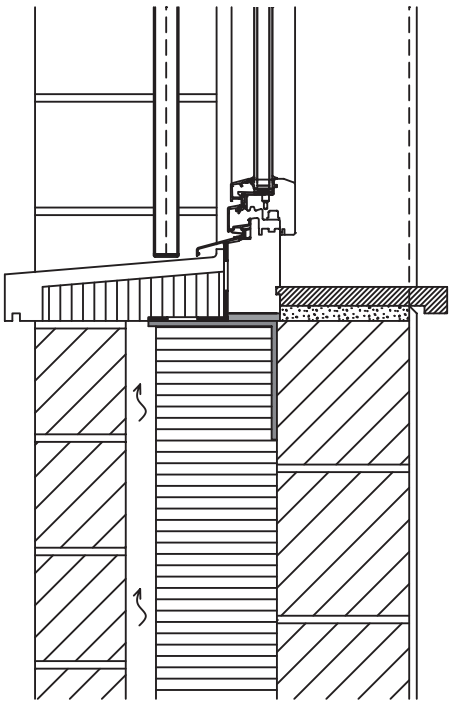

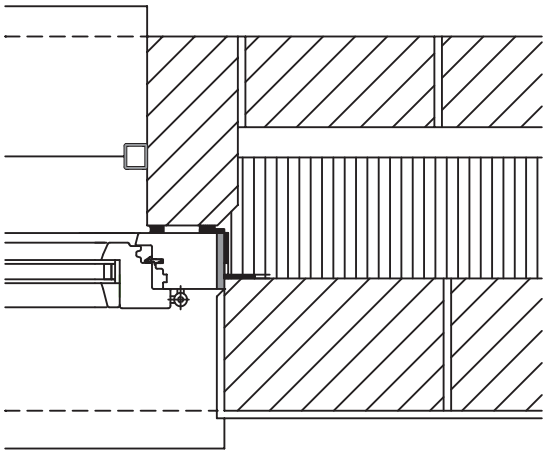

STOBAG VENTOSOL VS5200 / 2

Vertical awning with zipper technology, reveal mounting

EXPOSED BRICK MASONRY DETAIL SECTION

SCALE	1:10
PRODUCT	VENTOSOL
CREATED	March 2015/FS

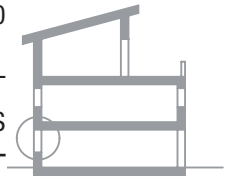

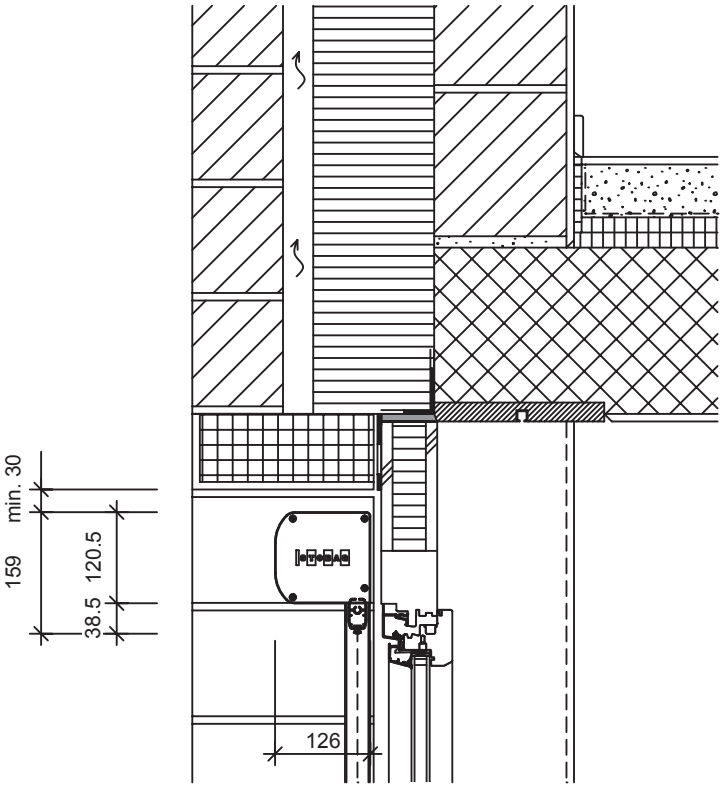

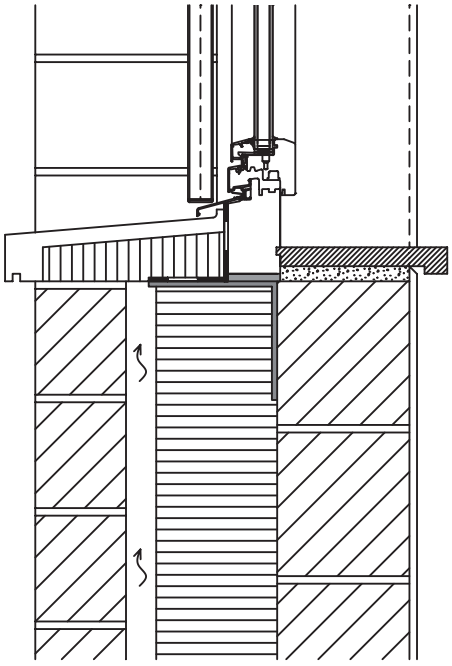

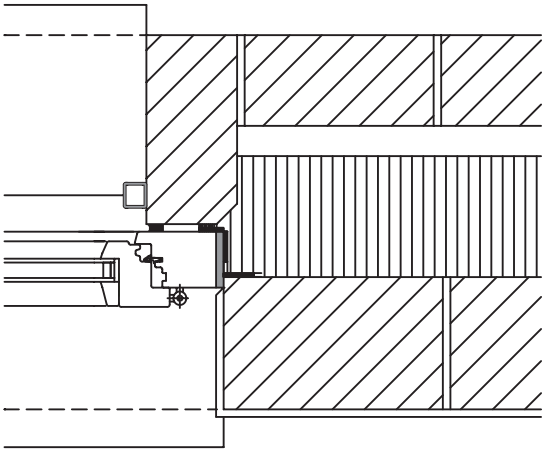

STOBAG VENTOSOL VS5200 / 2

Vertical awning with zipper technology, reveal mounting

EXPOSED CONCRETE FACADE DETAIL CUT

SCALE	1:10
PRODUCT	VENTOSOL
CREATED	March 2015/FS

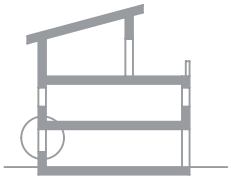

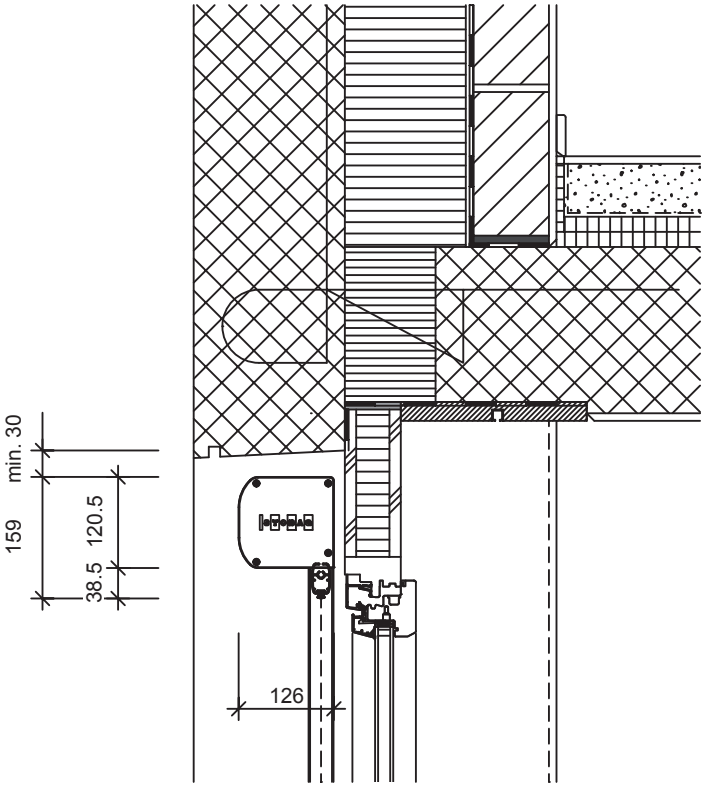

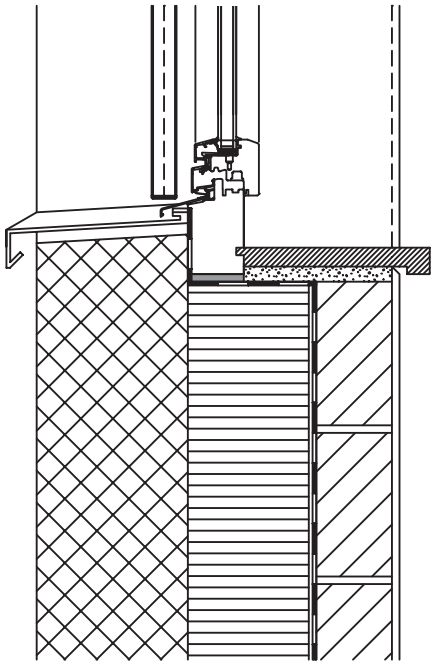

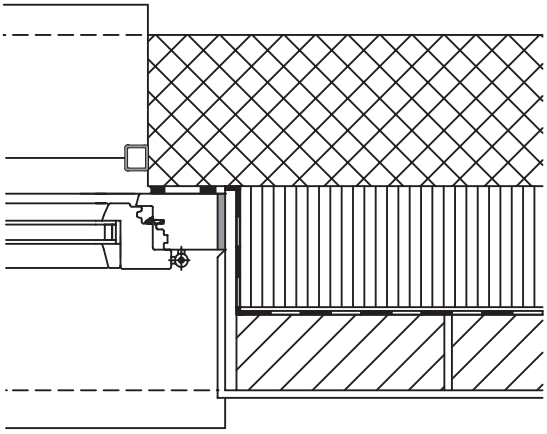

STOBAG VENTOSOL VS5400 / VD5400

Vertical awning with zipper technology, reveal mounting

EXPOSED CONCRETE FACADE DETAIL CUT

SCALE	1:10
PRODUCT	VENTOSOL
CREATED	August 2014/FS

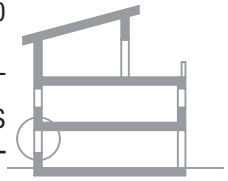

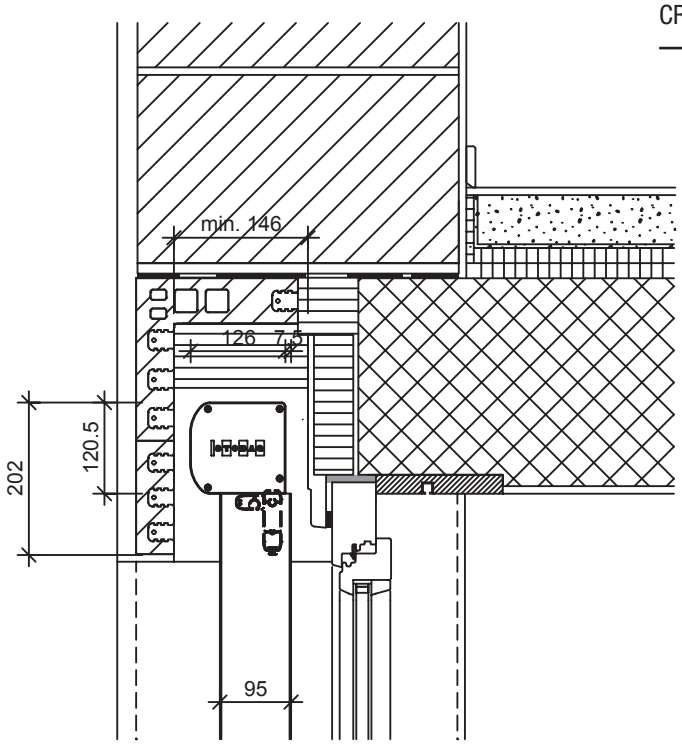

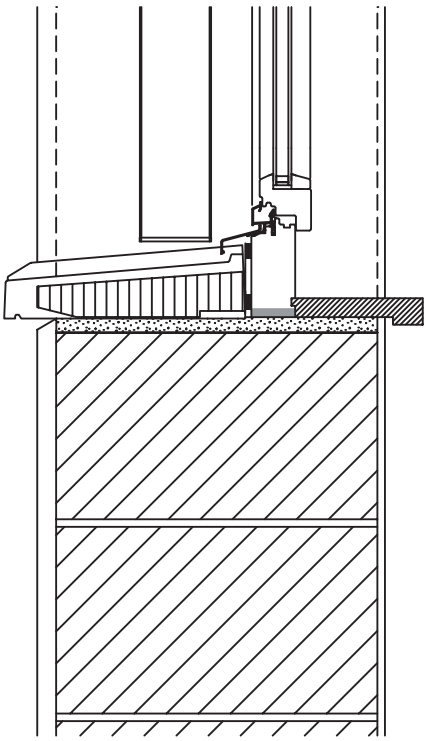

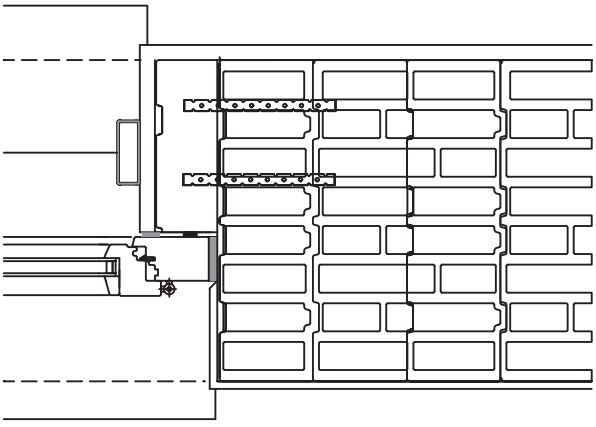

STOBAG VENTOSOL VS5400 / VD5400

Vertical awning with zipper technology, reveal mounting

EXPOSED CONCRETE FACADE DETAIL CUT

SCALE	1:10
PRODUCT	VENTOSOL
CREATED	August 2014/FS

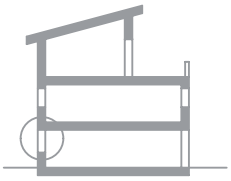

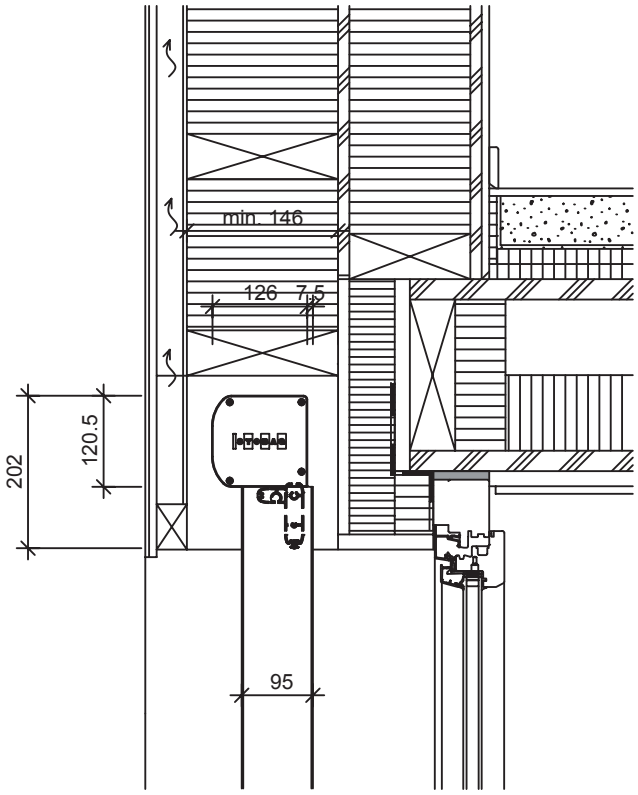

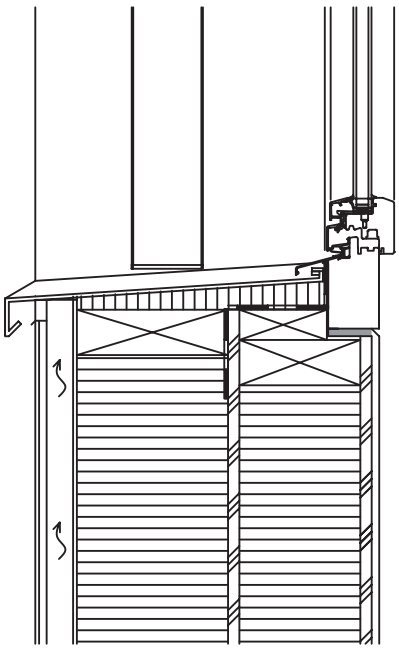

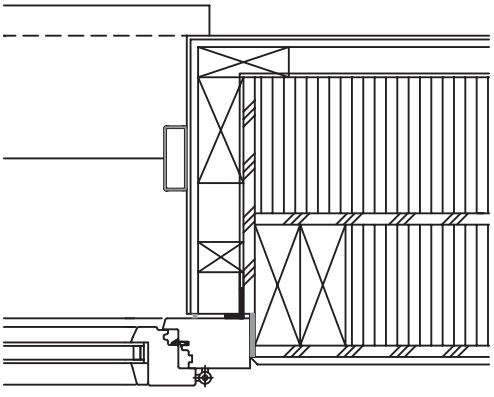

STOBAG VENTOSOL VS5400 / VD5400

Vertical awning with zipper technology, reveal mounting

EXPOSED CONCRETE FACADE DETAIL CUT

SCALE	1:10
PRODUCT	VENTOSOL
CREATED	August 2014/FS

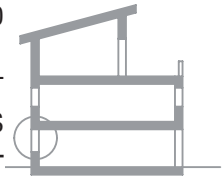

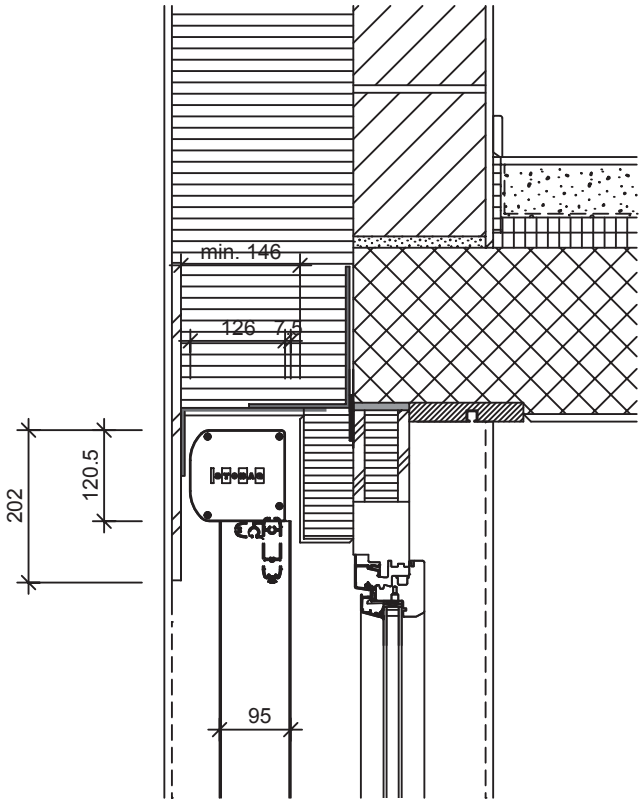

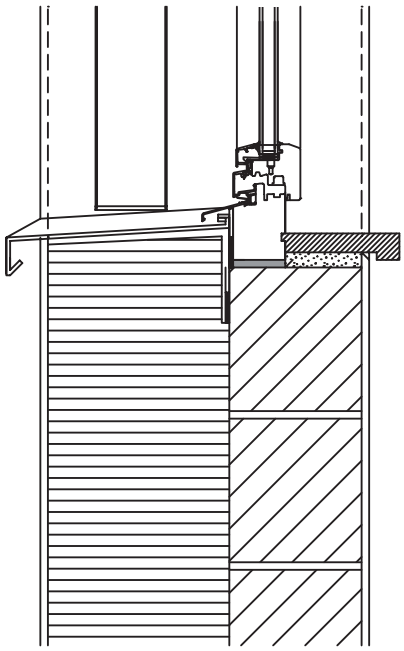

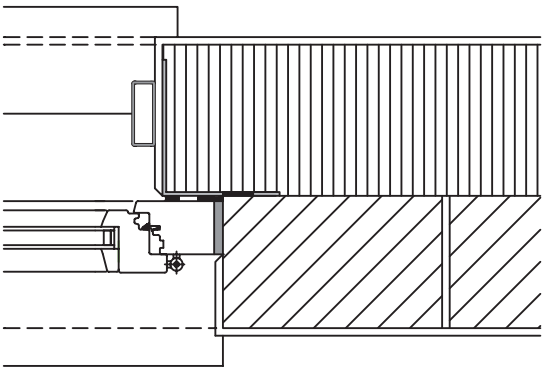

STOBAG VENTOSOL VS5400 / VD5400

Vertical awning with zipper technology, reveal mounting

EXPOSED CONCRETE FACADE DETAIL CUT

SCALE	1:10
PRODUCT	VENTOSOL
CREATED	August 2014/FS

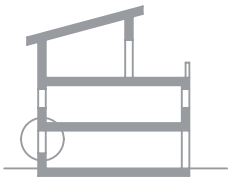

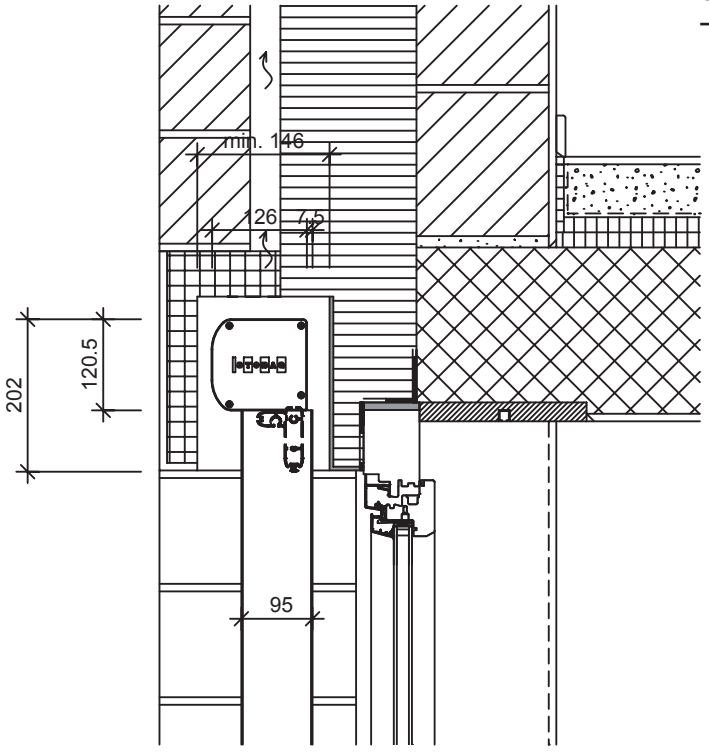

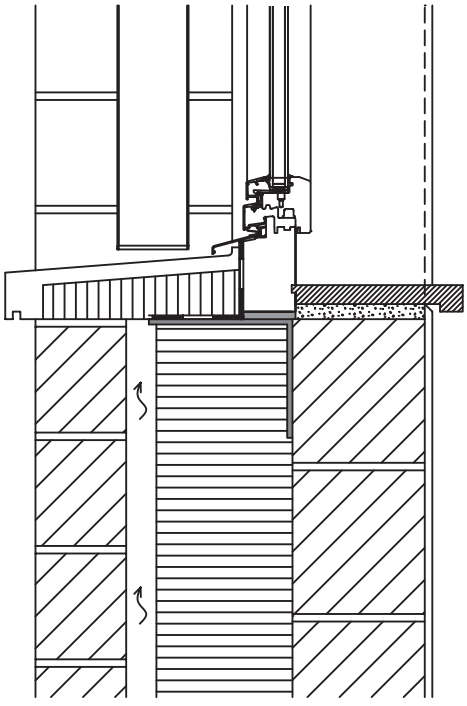

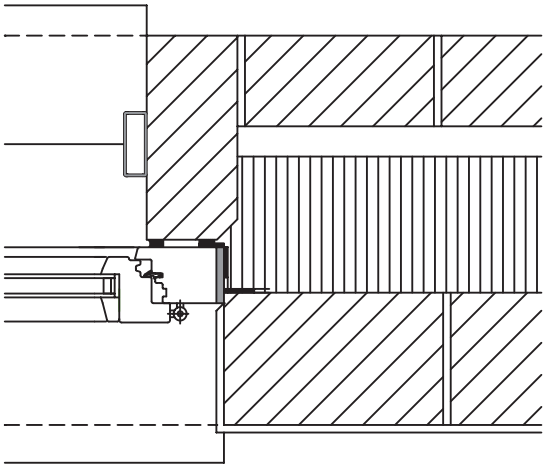

STOBAG VENTOSOL VS5600

Vertical awning with zipper technology, reveal mounting

EXPOSED CONCRETE FACADE DETAIL CUT

SCALE	1:10
PRODUCT	VENTOSOL
CREATED	August 2014/FS

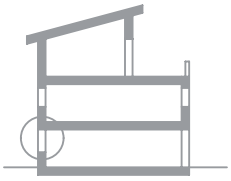

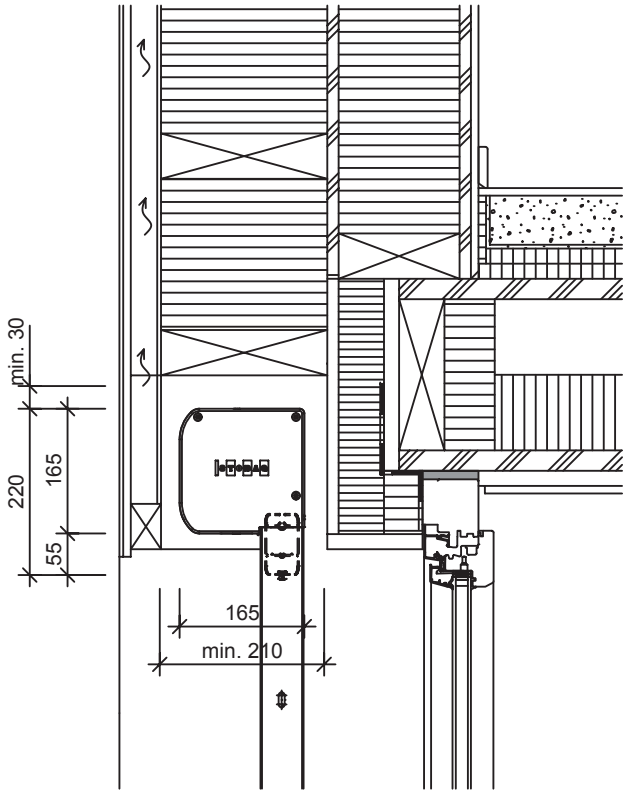

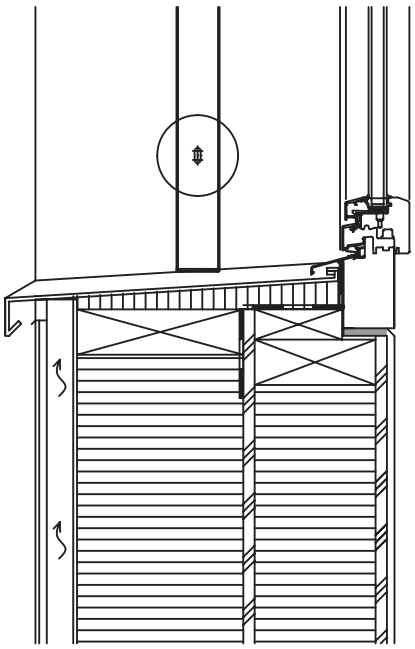

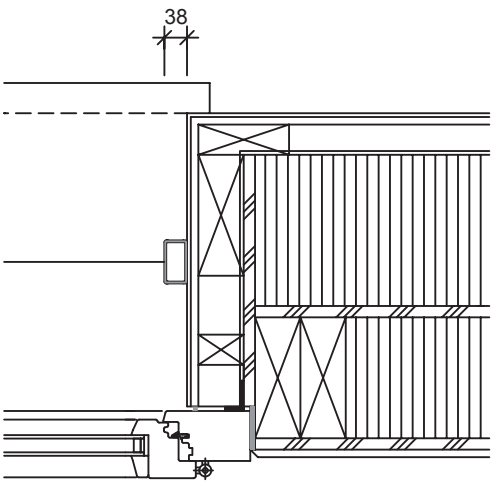

STOBAG VENTOSOL VS5600

Vertical awning with zipper technology, reveal mounting

EXPOSED CONCRETE FACADE DETAIL CUT

SCALE	1:10
PRODUCT	VENTOSOL
CREATED	August 2014/FS

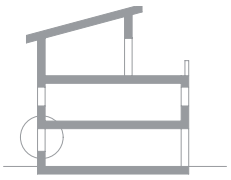

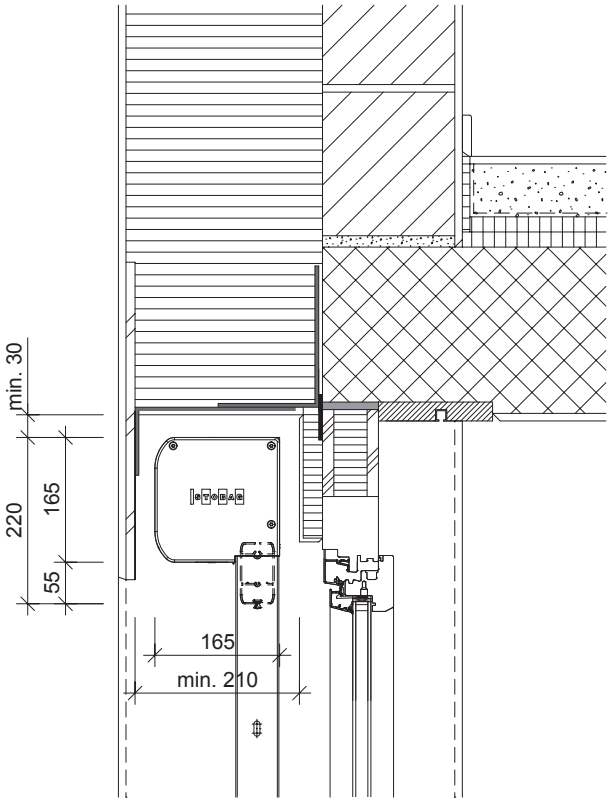

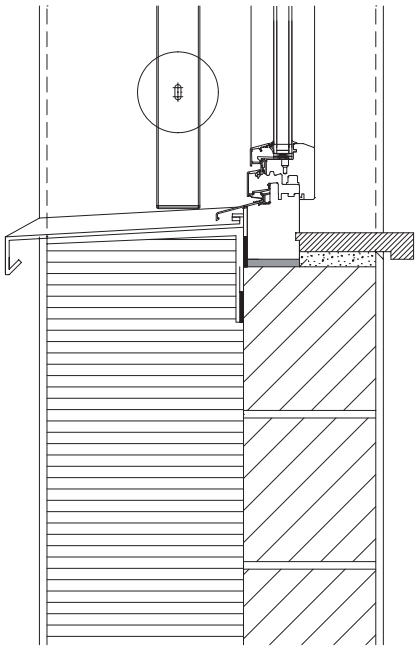

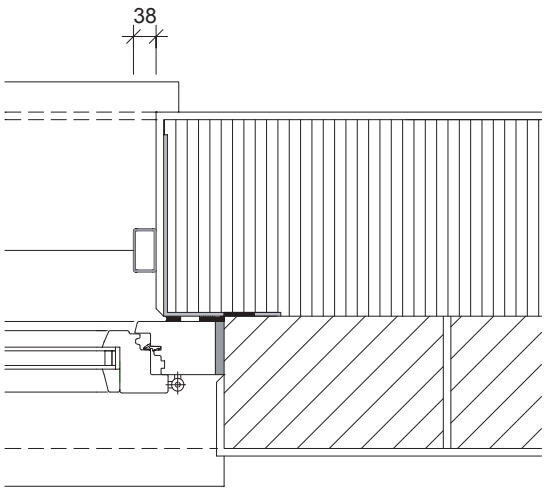

STOBAG VENTOSOL VS5600

Vertical awning with zipper technology, reveal mounting

EXPOSED CONCRETE FACADE DETAIL CUT

SCALE	1:10
PRODUCT	VENTOSOL
CREATED	August 2014/FS

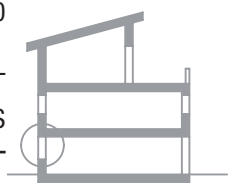

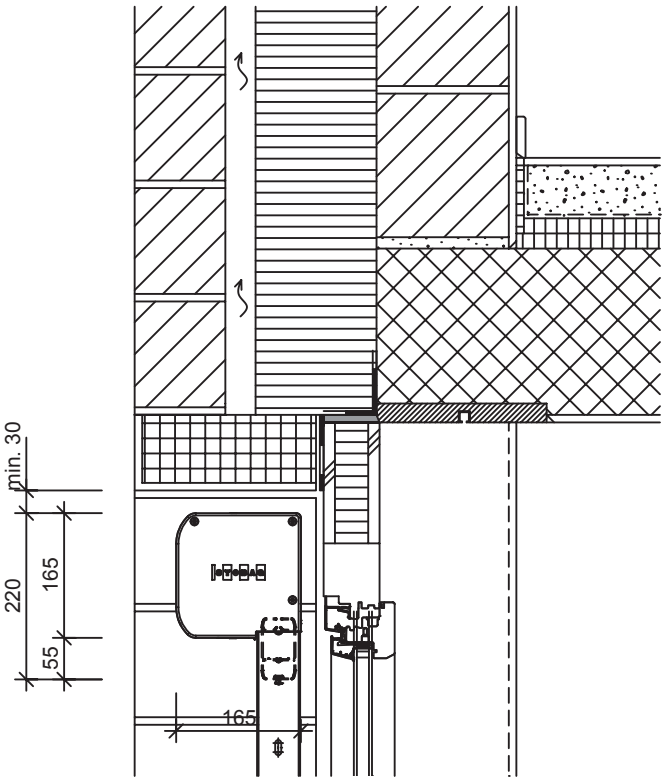

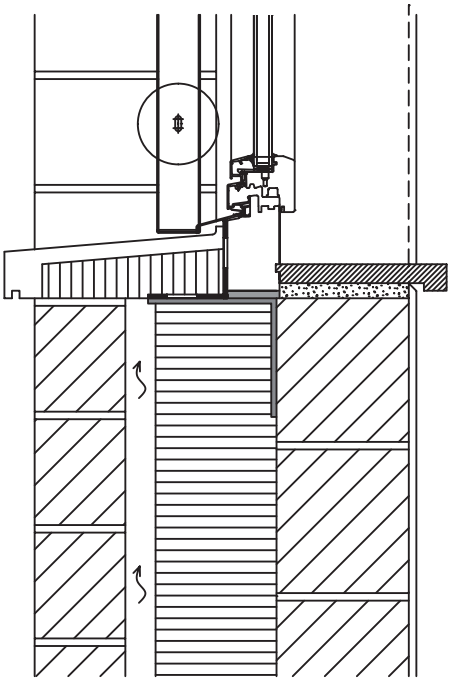

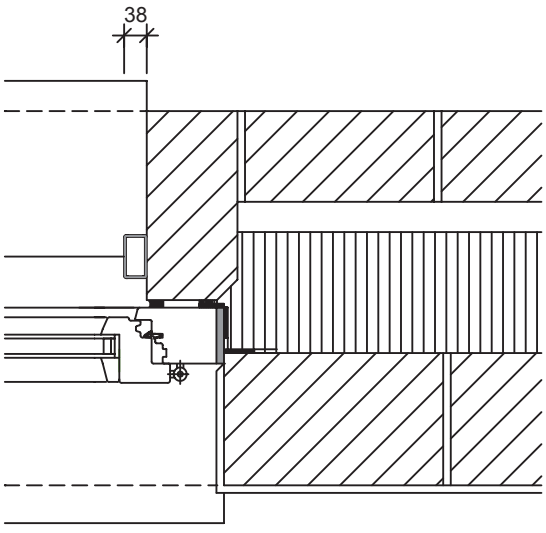

STOBAG VENTOSOL VS5600

Vertical awning with zipper technology, reveal mounting

EXPOSED CONCRETE FACADE DETAIL CUT

SCALE	1:10
PRODUCT	VENTOSOL
CREATED	August 2014/FS

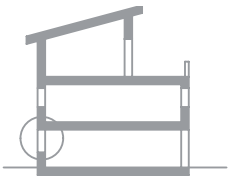

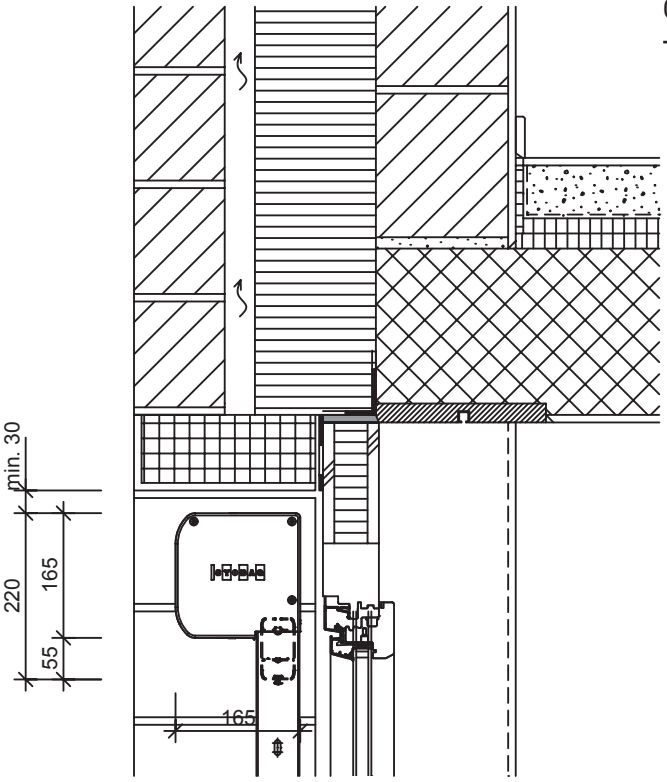

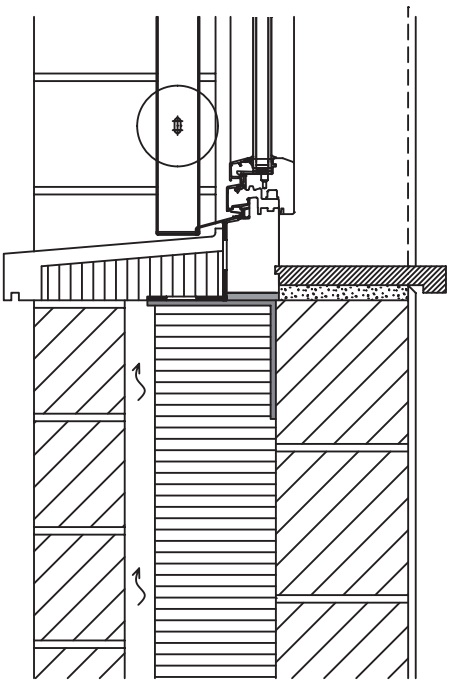

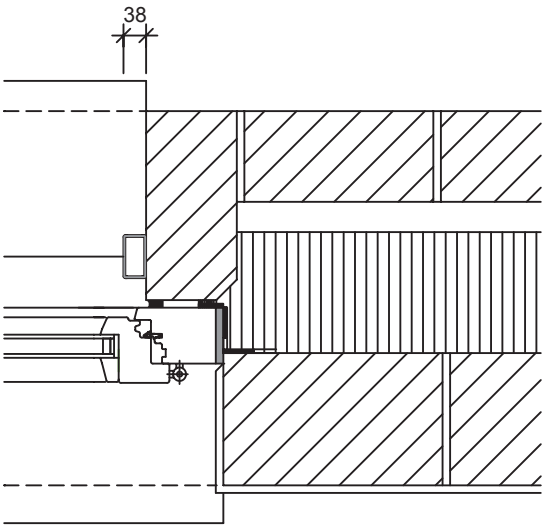

STOBAG VENTOSOL VS5600

Vertical awning with zipper technology, reveal mounting

EXPOSED CONCRETE FACADE DETAIL CUT
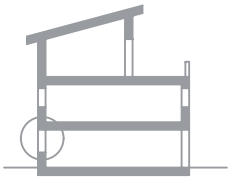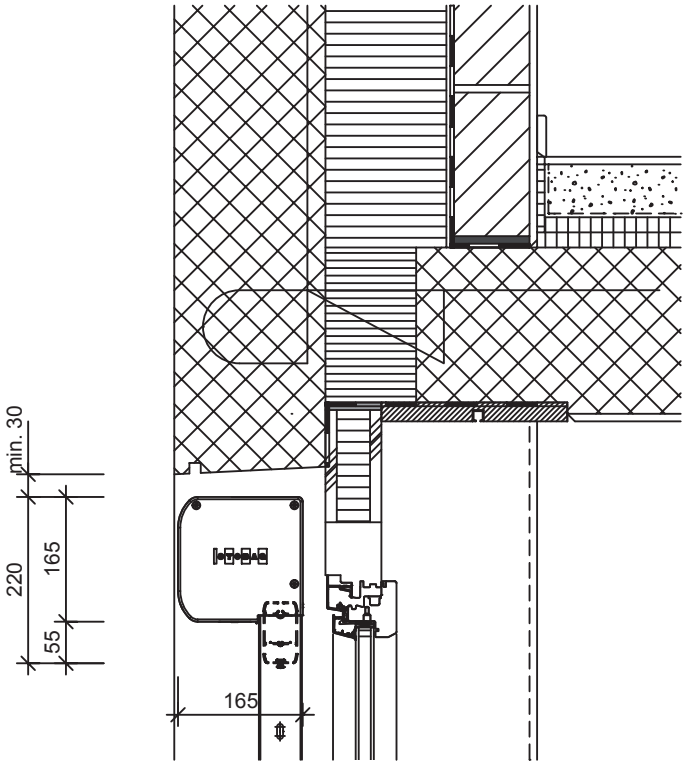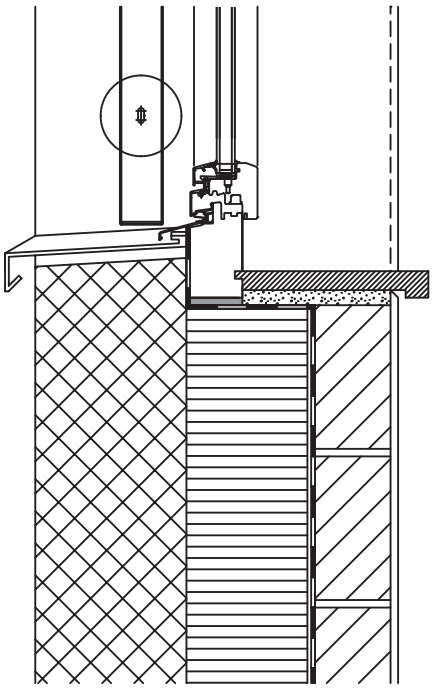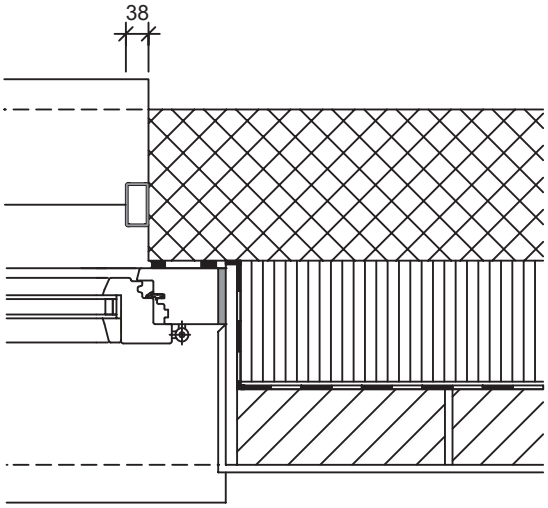
SCALE	1:10
PRODUCT	VENTOSOL
CREATED	August 2014/FS